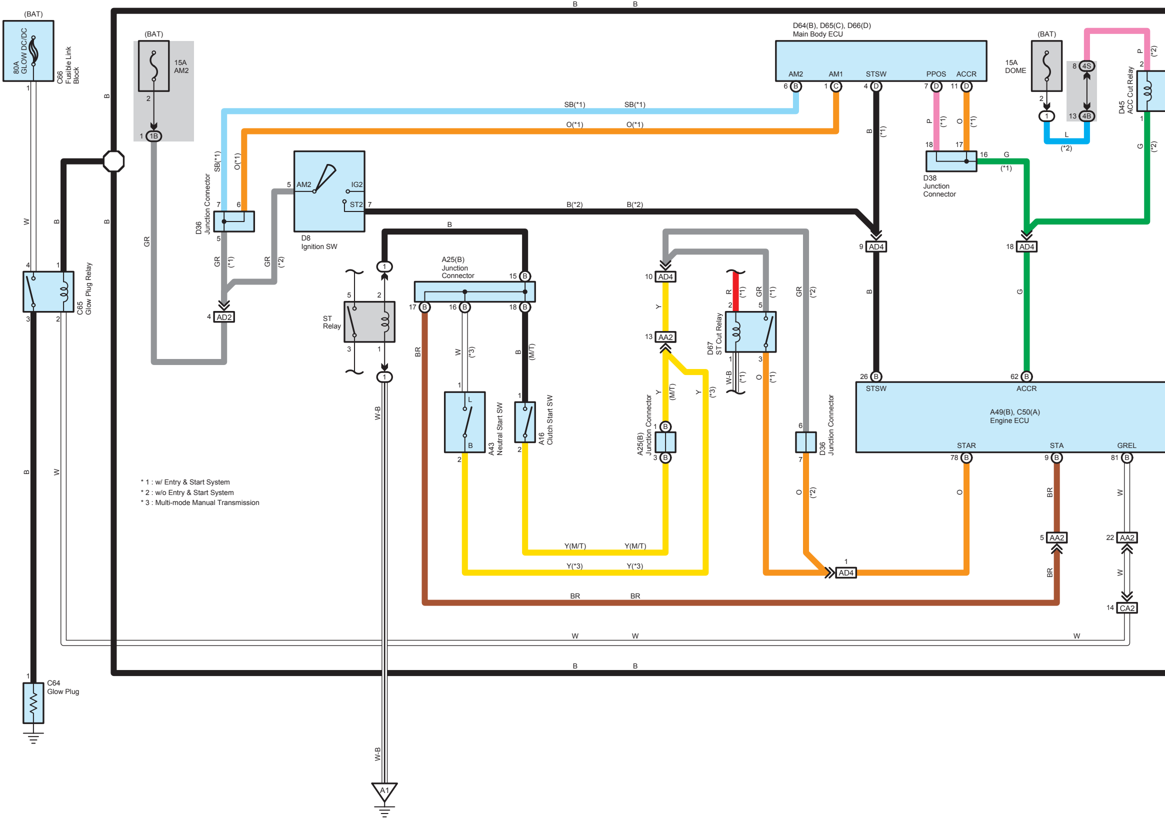
(BAT)
80A GLOW DC/DC
C66 Fusible Link Block
(BAT)
15A AM2
1B
D64(B), D65(C), D66(D) Main Body ECU
AM2
AM1
STSW
PPOS
ACCR
(BAT)
15A DOME
4S
4B
D45 ACC Cut Relay
SB(*1)
O(*1)
D36 Junction Connector
D8 Ignition SW
AM2
IG2
ST2
B(*2)
D38 Junction Connector
G
(*1)
L
(*2)
AD2
AD4
C65 Glow Plug Relay
ST Relay
A25(B) Junction Connector
A43 Neutral Start SW
A16 Clutch Start SW
AA2
A25(B) Junction Connector
D67 ST Cut Relay
D36 Junction Connector
A49(B), C50(A) Engine ECU
STSW
ACCR
STAR
STA
GREL
Y(M/T)
Y(*3)
BR
W
B
C64 Glow Plug
CA2
W-B
A1

* 1 : w/ Entry & Start System
* 2 : w/o Entry & Start System
* 3 : Multi-mode Manual Transmission

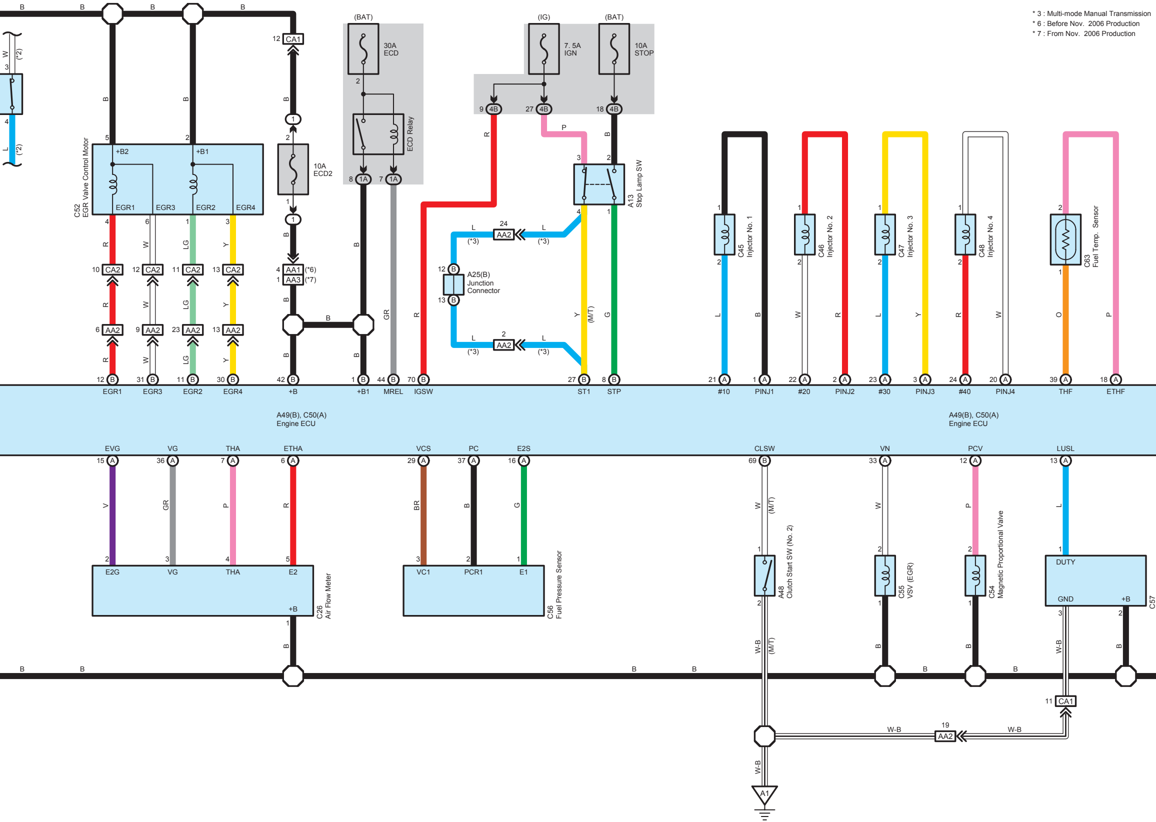
A49(B), C50(A)
Engine ECU
C52 EGR Valve Control Motor
+B2
+B1
EGR1
EGR3
EGR2
EGR4
CA1
CA2
AA2
AA1 (*6)
AA3 (*7)
(BAT)
30A ECD
ECD Relay
10A ECD2
(IG)
7. 5A IGN
(BAT)
10A STOP
4B
1A
A13 Stop Lamp SW
A25(B) Junction Connector
(*3)
(M/T)
(*2)
C45 Injector No. 1
C46 Injector No. 2
C47 Injector No. 3
C48 Injector No. 4
C63 Fuel Temp. Sensor
EGR1
EGR3
EGR2
EGR4
+B
+B1
MREL
IGSW
ST1
STP
#10
PINJ1
#20
PINJ2
#30
PINJ3
#40
PINJ4
THF
ETHF
EVG
VG
THA
ETHA
VCS
PC
E2S
CLSW
VN
PCV
LUSL
E2G
VG
THA
E2
+B
C26 Air Flow Meter
VC1
PCR1
E1
C56 Fuel Pressure Sensor
A48 Clutch Start SW (No. 2)
C55 VSV (EGR)
C54 Magnetic Proportional Valve
DUTY
GND
+B
C57
A1
B
W
L
R
LG
Y
GR
P
G
O
V
BR
W-B

* 3 : Multi-mode Manual Transmission
* 6 : Before Nov. 2006 Production
* 7 : From Nov. 2006 Production

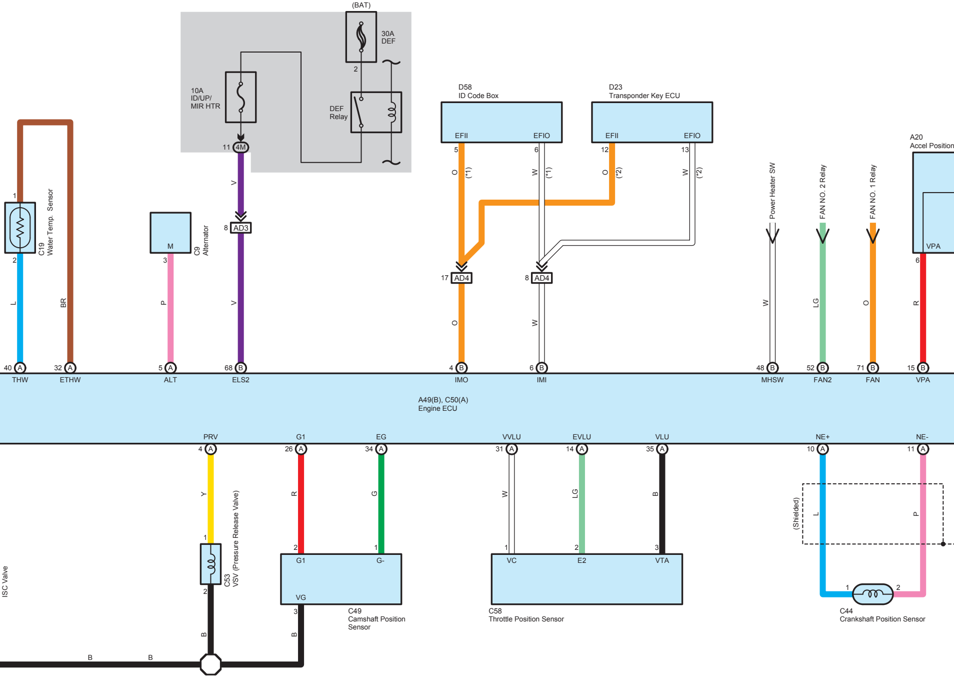
(BAT)
30A DEF
2
10A ID/UP/ MIR HTR
DEF Relay
11 4M
V
8 AD3
D58 ID Code Box
EFII
EFIO
5
6
O
(*1)
W
(*1)
D23 Transponder Key ECU
EFII
EFIO
12
13
O
(*2)
W
(*2)
17 AD4
8 AD4
O
W
A20 Accel Position
VPA
6
R
Power Heater SW
FAN NO. 2 Relay
FAN NO. 1 Relay
W
LG
O
1
2
C19 Water Temp. Sensor
L
BR
M
3
C9 Alternator
P
V
40 A THW
32 A ETHW
5 A ALT
68 B ELS2
4 B IMO
6 B IMI
48 B MHSW
52 B FAN2
71 B FAN
15 B VPA
A49(B), C50(A) Engine ECU
PRV 4 A
G1 26 A
EG 34 A
VVLU 31 A
EVLU 14 A
VLU 35 A
NE+ 10 A
NE- 11 A
Y
1
2
C53 VSV (Pressure Release Valve)
B
ISC Valve
R
G
2
1
G1
G-
VG
3
B
C49 Camshaft Position Sensor
W
LG
B
1
2
3
VC
E2
VTA
C58 Throttle Position Sensor
(Shielded)
L
P
1
2
C44 Crankshaft Position Sensor
B
B

* 1 : w/ Entry & Start System
* 2 : w/o Entry & Start System

* 1 : w/ Entry & Start System
* 2 : w/o Entry & Start System
* 4 : w/ Daytime Running Light
* 5 : w/o Daytime Running Light

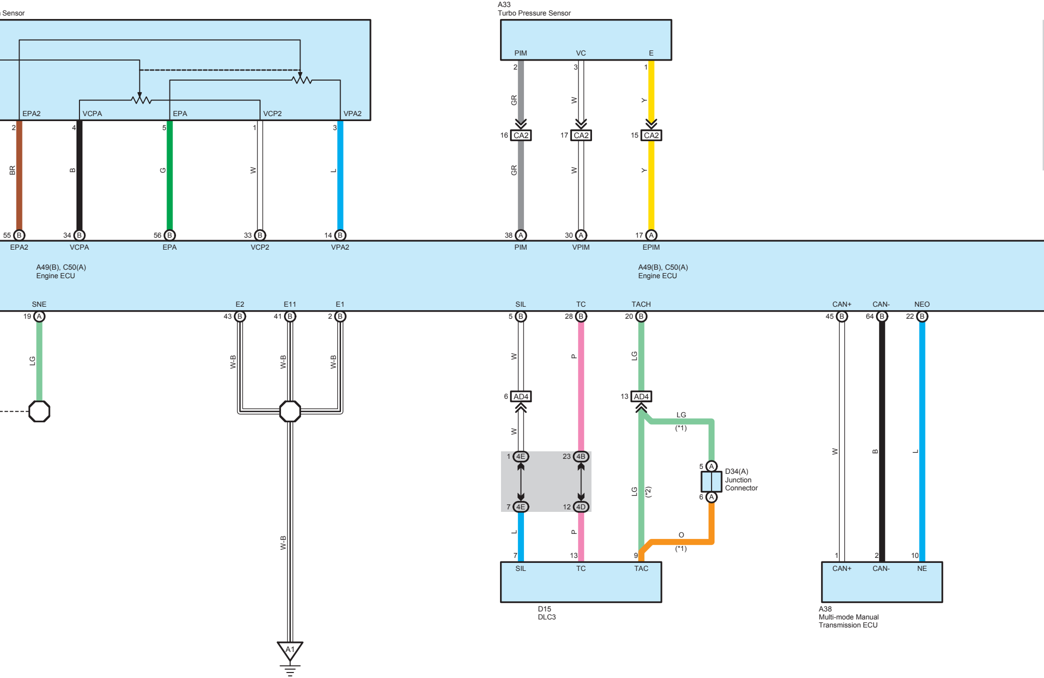
Sensor
EPA2
VCPA
EPA
VCP2
VPA2
2
4
5
1
3
BR
B
G
W
L
55 B
34 B
56 B
33 B
14 B
EPA2
VCPA
EPA
VCP2
VPA2
A33
Turbo Pressure Sensor
PIM
VC
E
2
3
1
GR
W
Y
16 CA2
17 CA2
15 CA2
38 A
30 A
17 A
PIM
VPIM
EPIM
A49(B), C50(A)
Engine ECU
A49(B), C50(A)
Engine ECU
SNE
E2
E11
E1
SIL
TC
TACH
CAN+
CAN-
NEO
19 A
43 B
41 B
2 B
5 B
28 B
20 B
45 B
64 B
22 B
LG
W-B
W-B
W-B
W
P
LG
6 AD4
13 AD4
LG
(*1)
1 4E
23 4B
7 4E
12 4D
5 A
6 A
D34(A)
Junction
Connector
LG
(*2)
O
(*1)
L
P
7
13
9
SIL
TC
TAC
D15
DLC3
W
B
L
1
2
10
CAN+
CAN-
NE
A38
Multi-mode Manual
Transmission ECU
W-B
A1

* 4 : w/ Daytime Running Light
* 5 : w/o Daytime Running Light

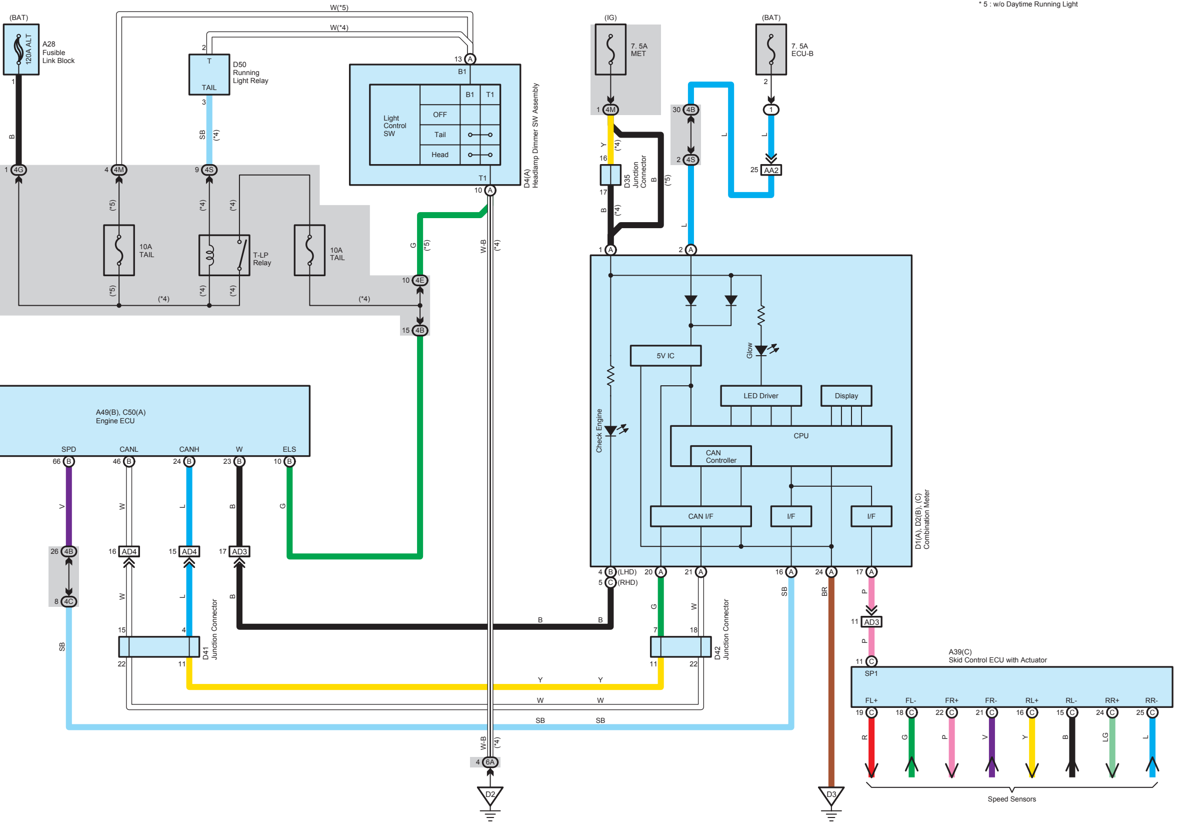

(BAT)
A28
Fusible
Link Block
120A ALT
W(*5)
W(*4)
D50
Running
Light Relay
T
TAIL
SB
(*4)
4G
4M
4S
10A
TAIL
T-LP
Relay
10A
TAIL
(*5)
(*4)
Light
Control
SW
OFF
Tail
Head
B1
T1
D4(A)
Headlamp Dimmer SW Assembly
G
(*5)
W-B
(*4)
4E
4B
A49(B), C50(A)
Engine ECU
SPD
CANL
CANH
W
ELS
V
W
L
B
G
AD4
AD3
4C
SB
D41
Junction Connector
Y
W
SB
6A
D2
(IG)
7. 5A
MET
(BAT)
7. 5A
ECU-B
D35
Junction
Connector
AA2
Check Engine
Glow
5V IC
LED Driver
Display
CPU
CAN
Controller
CAN I/F
I/F
I/F
D1(A), D2(B), (C)
Combination Meter
(LHD)
(RHD)
D42
Junction Connector
BR
P
D3
A39(C)
Skid Control ECU with Actuator
SP1
FL+
FL-
FR+
FR-
RL+
RL-
RR+
RR-
R
G
P
V
Y
B
LG
L
Speed Sensors